Park NX12

The most versatile AFM platform for your nanoscale microscopy needs

- Atomic Force Microscopy (AFM) for nanometer resolution imaging with electrical, magnetic, thermal, and mechanical property measurement capabilities
- Pipette-based scanning system for high resolution Scanning Ion Conductance Microscopy (SICM)
- Inverted Optical Microscopy (IOM) for transparent material research and fluorescence microscopy integration

www.parksystems.com

Park SYSTEMS

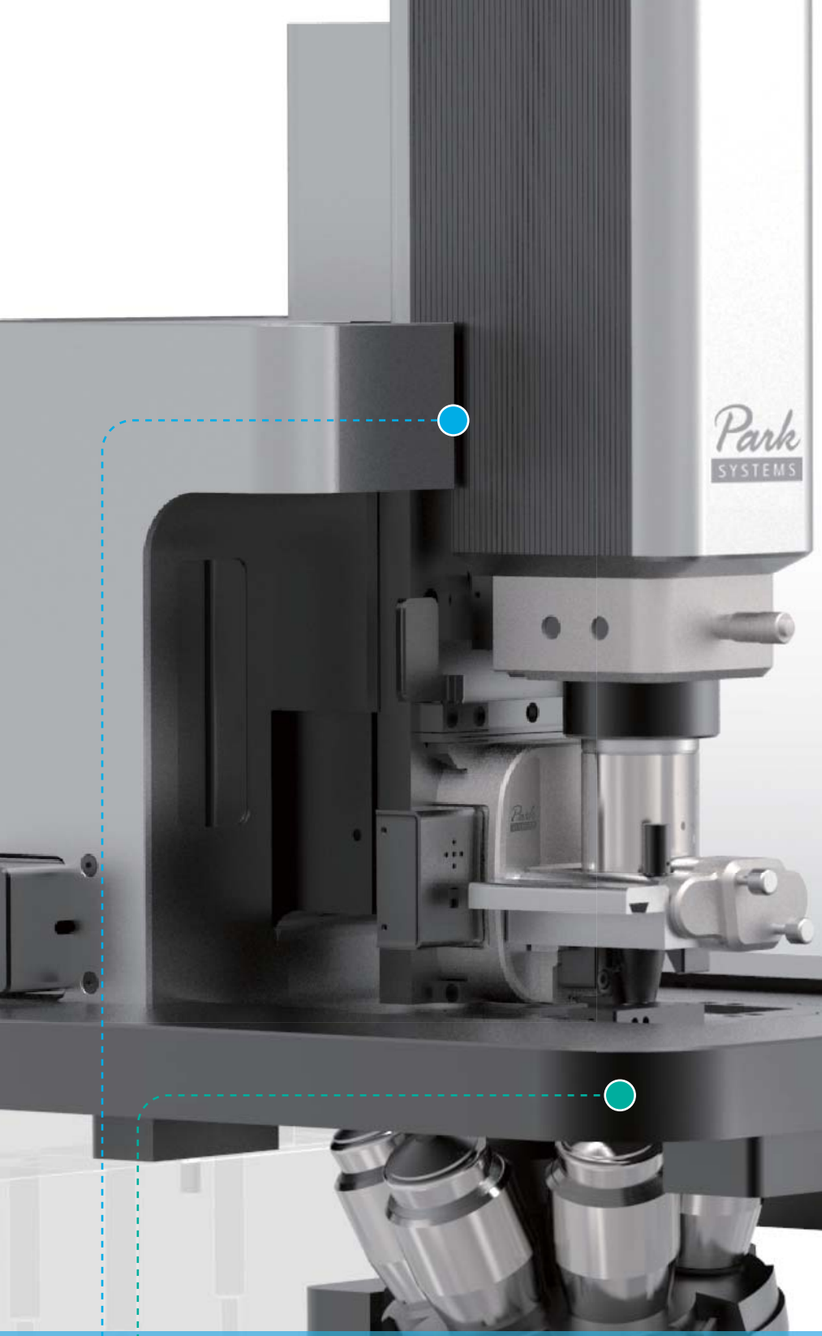

Proven NX10 Performance
Equipped with Inverted Optical Microscopy

Park NX12 couples the versatility and accuracy of Park AFM with a sample stage for inverted optical microscopy. This allows users to easily set up pipette-based techniques and work with samples that are transparent or opaque and soft or hard.

The perfect platform for fundamental electrochemistry

The study of the electrochemistry of batteries, fuel cells, sensors, and corrosion is a rapidly growing field, yet many AFMs do not directly address its unique needs. Park NX12 offers the functionality and flexibility chemistry researchers require by giving them one simple, easy-to-use platform with all the tools they need including:

- Versatile and easy-to-use electrochemistry cells
- Environmental control options for inert gas and humidity
- Bi-potentiostat compatibility

Researchers can utilize the Park NX12 platform for various electrochemical applications:

- Scanning Electrochemical Microscopy (SECM)
- Scanning Electrochemical Cell Microscopy (SECCM)
- Electrochemical Atomic Force Microscopy (EC-AFM) and Electrochemical Scanning Tunneling Microscopy (EC-STM)

Easy optical access with motorized focus stage

The system allows for top, side, and bottom optical access to the probe from various angles during measurements. This broad optical access combined with the device's modular design also allows for the addition of optical or nano-optical add-ons.

SICM-based electrochemistry applications

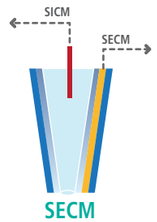

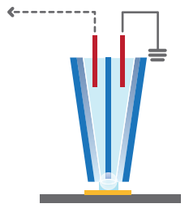

AFM-based electrochemisty applications

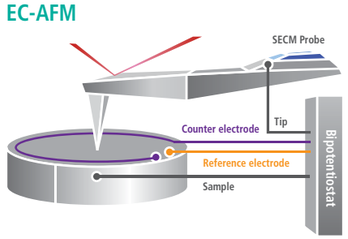

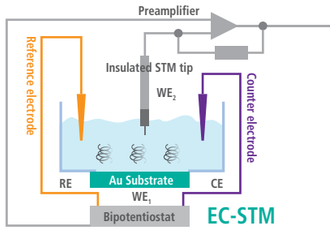

Built with multi-user facilities in mind

Park NX12 was built from the ground up to accommodate the needs of multi-user facilities. Other AFM solutions lack the required versatility to address the diverse needs of users in these facilities, making it difficult to justify the equipment cost. The Park NX12, however, is built to accommodate standard ambient AFM, in-liquid SPM, optical, and nano-optical imaging, making it one of the most flexible AFMs available.

A modular platform for shared user facilities

- The Park NX12 is an AFM platform specifically tailored to address the needs of analytical and electrochemistry researchers as well as others working in shared use facilities.
- It provides a versatile solution for SPM-based characterization of chemical and electrochemical properties and surface characterization in both air and liquid media for a broad range of opaque and transparent materials.
- The Park NX12 is easy to use for pipette-based SPM techniques with broad visual optical access to the scanning probe.
- The Park NX12's reasonable price and unparalleled accuracy makes it the ideal platform for multi-user facilities as well as early career researchers.

Multiple applications

The Park NX12 can serve a wide range of functions, including PinPoint™ in-liquid and nanomechanical mapping, inverted optical microscopy to locate transparent samples, SICM for imaging ultra-soft samples, and enhanced vision to improve optics for transparent samples.

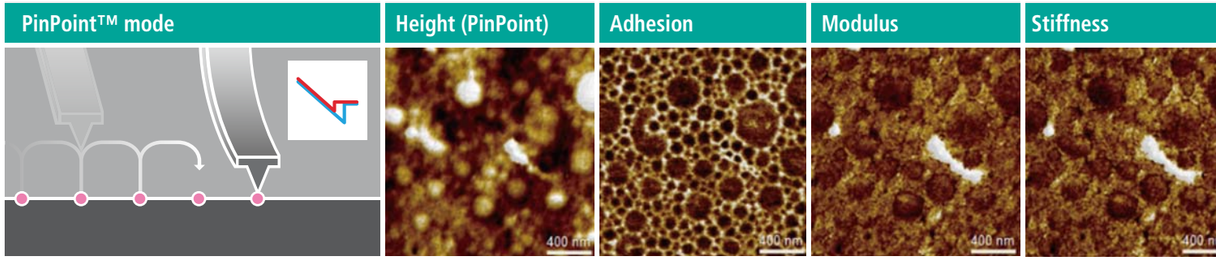

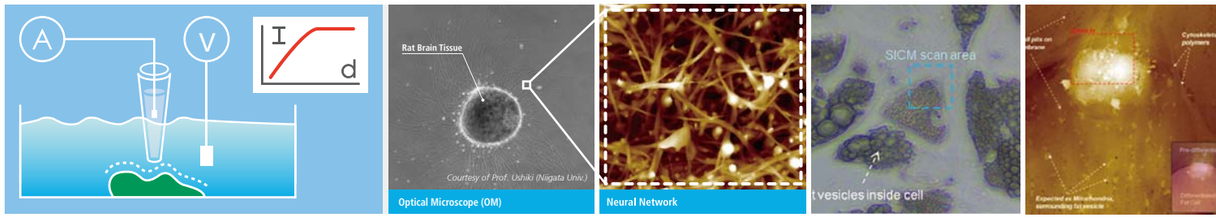

Comprehensive force spectroscopy solution

The Park NX12 provides a complete package for nanomechanical characterization in-liquid and in-air, making it ideal for a wide range of applications.

Modular

We make it easy to modify the Park NX12 to suit the unique needs of your lab by installing optional hardware and software add-ons even after installation.

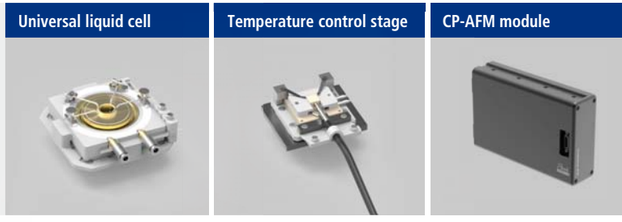

Park NX12

Why the world's most accurate small sample AFM is also the easiest to use

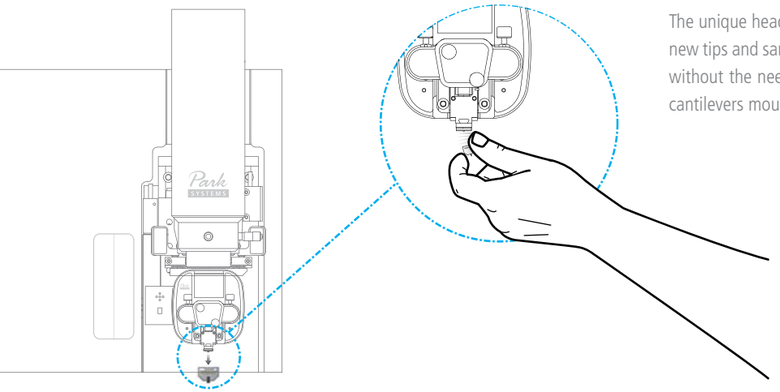

Easy tip and sample exchange

The unique head design allows easy side access allowing you to easily snap new tips and samples into place by hand. The cantilever is ready for scanning without the need for any tricky laser beam alignment by using pre-aligned cantilevers mounted on to the cantilever tip holder.

Easy Snap by Hand

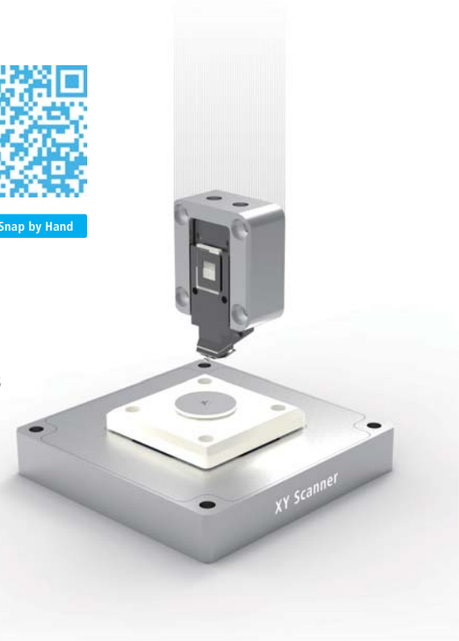

Lightning fast automatic tip approach

Our automatic tip-to-sample approach requires no user intervention. By monitoring the cantilever's response to the approaching surface, Park NX12 can initiate and complete an automatic fast tip-to-sample approach within 10 seconds of the cantilever's loading. Fast feedback by the high-speed Z-scanner and low-noise signal processing by the NX electronics controller enable quick engagement to the sample surface without any user intervention. It just works; minimal user involvement is required.

Easy, intuitive laser beam alignment

With our advanced pre-aligned cantilever holder, the laser beam is focused on the cantilever upon placement. Furthermore, the natural on-axis, top-down view—the only one in the industry—allows you to easily find the laser spot. Since the laser beam falls vertically onto the cantilever, you can intuitively move the laser spot along the X- and Y-axis by rotating two positioning knobs. As a result, you can easily find the laser and position it onto the position-sensitive photodiode using our operation software's beam alignment user interface. From there, all you will need is a minor adjustment to maximize the signal prior to starting data acquisition.

The laser beam is always focused on the probe tip upon cantilever replacement.

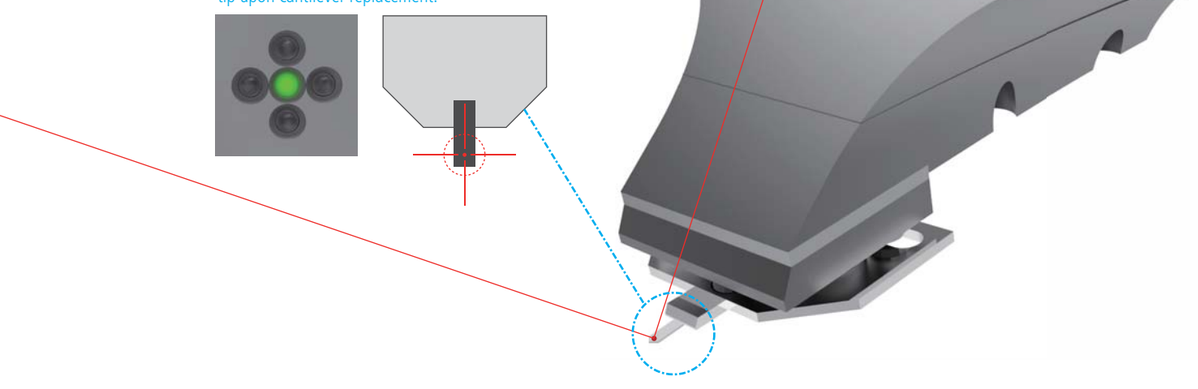

Park SmartScan™

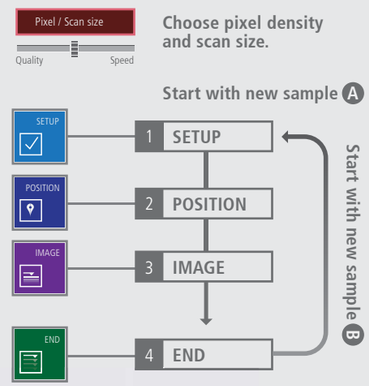

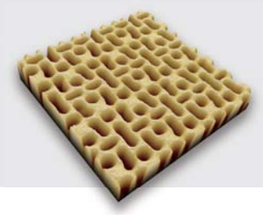

Single-click imaging with Park SmartScan™ Auto mode

All you need to specify for AFM imaging are your quality-speed preference, the target pixel density, and scan size. Outside of those factors, you can leave all sophisticated AFM parameters up to the Auto mode of Park SmartScan™. The system will start a measurement with optimized conditions for automatic imaging at the click of a button.

An AFM OS for everyone, from amateurs to experts

Whether your AFM needs are focused on academic research, industrial metrology or failure analysis, SmartScan's Auto mode offers a streamlined system to generate publishable high quality AFM data. Moreover, SmartScan™ promises productive sessions with an AFM even for beginners to obtain quality data as good as an expert's, in much shorter time.

FastApproach™

Click the Position button and the Z scanner approaches the sample automatically and at a much higher speed than the typical manual approach. Park's patented FastApproach™ safely takes the probe down to the sample surface at full speed without the user's intervention and engages 10 seconds after the cantilever is loaded.

Easy to find an area of interest

After tip-to-sample engagement, the optical camera will automatically focus on the sample to find your area of interest (AOI). The UX of Park SmartScan™ easily enables intuitive navigation of the sample by giving users control of the AFM's motorized stages in the integrated optical view window.

Speeds up imaging with AdaptiveScan™

Park's innovative AdaptiveScan™ controls the scan speed automatically based on the peaks and valleys of the sample surface. AdaptiveScan™ adjusts the optimum scan speed dynamically to acquire a quality image of an unknown morphology at a higher speed. This effectually shortens the imaging time while retaining top image quality comparable to that obtained by a well-trained expert manually. When moving to neighboring locations or zooming-in to a target, AdaptiveScan automatically applies a new optimal condition.

Park NX12

Adaptable to any project

The wide range of scanning modes and modular design of the NX series allows it to be easily tailored to the needs of any scanning probe microscopy project.

Standard Imaging

- True Non-Contact AFM
- Basic Contact AFM
- Lateral Force Microscopy (LFM)
- Phase Imaging
- Intermittent (tapping) AFM

Chemical Properties

- Scanning Electrochemical Cell Microscopy (SECCM)
- Scanning Electrochemical Microscopy (SECM)
- Electrochemical Microscopy (EC-STM and EC-AFM)
- Chemical Force Microscopy with Functionalized Tip

Thermal Properties

- Scanning Thermal Microscopy (SThM)

Mechanical Properties

- PinPoint Nanomechanical Mapping
- Force Modulation Microscopy (FMM)
- Nanoindentation
- Nanolithography
- Nanolithography with High Voltage
- Nanomanipulation
- Piezoelectric Force Microscopy (PFM)

Electrical Properties

- Conductive AFM
- I-V Spectroscopy
- Kelvin Probe Force Microscopy (KPFM)
- KPFM with High Voltage
- Scanning Capacitance Microscopy (SCM)
- Scanning Spreading-Resistance Microscopy (SSRM)
- Scanning Tunneling Microscopy (STM)
- Scanning Tunneling Spectroscopy (STS)
- Time-Resolved Photo Current Mapping (Tr-PCM)

Optical Properties

- Tip-Enhanced Raman Spectroscopy (TERS)
- Time-Resolved Photo Current Mapping (Tr-PCM)

Magnetic Properties

- Magnetic Force Microscopy (MFM)
- Tunable MFM

Dielectric/Piezoelectric Properties

- Electric Force Microscopy (EFM)
- Dynamic Contact EFM (DC-EFM)
- Piezoelectric Force Microscopy (PFM)
- PFM with High Voltage

Force Measurement

- Force Distance (F-D) Spectroscopy
- Force Volume Imaging
- Spring Constant Calibration by Thermal Method

1 Tall Sample 1.5 µm step height

Scan Mode: Non-contact mode, Topography from Z position sensor

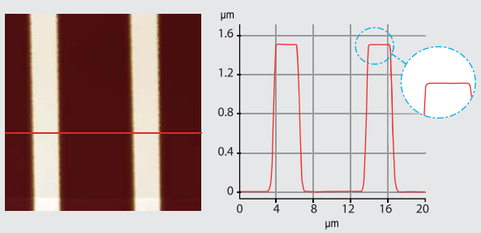

2 Flat Sample Atomic steps of sapphire wafer

0.3 nm step height, Scan Mode: Non-contact mode, Topography from Z position sensor

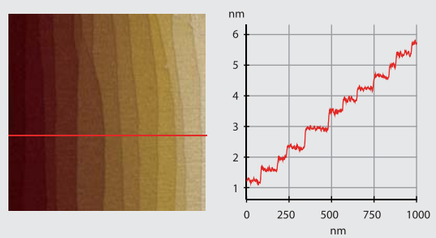

3 Hard Sample Tungsten film

Scan Mode: Non-contact mode, Topography from Z position sensor

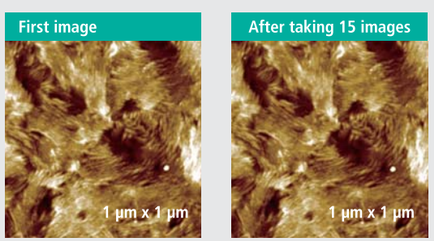

4 Soft Sample Collagen fibril

Scan Mode: Non-contact mode, Topography from Z position sensor

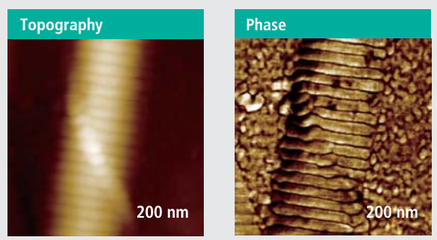

Options

A wide range of environment control options including versatile electrochemistry cells, temperature stage, and glovebox with humidity control.

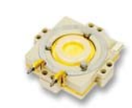

Electrochemistry cells

- Electrochemistry cell
- Electrochemisty toolkit for universal liquid cell

Electrochemistry options

- Potentiostat
- Bi-potentiostat

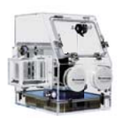

Environmental Control Options

- Glovebox
- Live cell chamber

Temperature Controlled Stages

- Temperature controlled stage (-25 ~180 °C)
- 250 °C heating stage
- 600 °C heating stage

Magnetic Field Generator

- Applies external magnetic field parallel to sample surface
- Tunable magnetic field
- Range: ~ 300 gauss

Z Scanner Heads

- 15 µm Z Scanner AFM head
- 30 µm Z Scanner AFM head
- 15 µm Z Scanner SICM module
- 30 µm Z Scanner SICM module

In-Liquid Imaging Options

- Liquid probe hand
- Open liquid cell
- Universal liquid cell

Acoustic Enclosure

- Stand alone type AE 204
- Stand alone type AE 301

Clip-type Chip Carrier

- Can be used with unmounted cantilever
- Tip bias function available for conductive AFM and EFM
- Tip bias range: -10 V ~ 10 V

Starter kits for advanced modes

- Easy to use for advanced modes
- Includes specialized probes and samples

Park NX12
Specification

Scanner

Z scanner

AFM Head
Flexure guided high-force scanner
Scan range: 15 µm (optional 30 µm)

SICM Head
Flexure-guided structure driven by multilayer piezoelectric actuator
Scan range: 15 µm (optional 30 µm)

XY scanner

Flexure guided XY scanner with closed-loop control
Scan range: 100 x 100 µm

Stage

XY stage travel range: 50 mm x 50 mm
Z stage travel range: 25 mm
Focus stage travel range: 15 mm

Vision

Direct on-axis view of sample surface and cantilever
Field-of-view: 840 µm × 630 µm (with 10× objective lens)
Camera: 5 M Pixel (default), 1 M Pixel (optional)

Objective lens

10x (NA. 0.23) ultra-long working distance lens
20x (NA. 0.35) high-resolution, long working distance lens

Inverted Optical Microscpy

Objective lens: Up to 100x
Fluorescence microscopy (optional)
Confocal microscopy (optional)

Electronics

Signal processing

ADC: 18 channels
24-bit ADCs for X, Y, and Z scanner position sensor
DAC: 17 channels
20-bit DACs for X, Y, and Z scanner positioning

Integrated functions

3 channels of digital lock-in amplifier
Spring constant calibration (Thermal vibration method)
Digital Q control

Options/Modes

Standard Imaging

- True Non-contact™ Mode
- Basic Contact Mode
- Lateral Force Microscopy (LFM)
- Phase Imaging Mode
- Tapping Mode
- PinPoint™ Mode: PinPoint imaging

Chemical Properties

- SECCM
- SECM
- EC-AFM and EC-STM
- Chemical force microscopy with Functionalized Tip

Dielectric/Piezoelectric Properties

- Electric Force Microscopy (EFM)
- Dynamic Contact EFM (EFM-DC)
- Piezoelectric Force Microscopy (PFM)
- PFM with High Voltage

Force Measurement

- Force Distance (F/d) Spectroscopy
- Force Volume Imaging

Magnetic Properties

- Magnetic Force Microscopy (MFM)
- Tunable Magnetic Field MFM

Thermal Properties

- Scanning Thermal Microscopy (SThM)

Electrical Properties

- Conductive AFM (CP-AFM)
- Pinpoint™ Conductive AFM
- I/V Spectroscopy
- Kelvin Probe Force Microscopy (KPFM)
- KPFM with high voltage
- QuickStep™ Scanning Capacitance Microscopy (SCM)
- Scanning Spreading-Resistance Microscopy (SSRM)
- Scanning Tunneling Microscopy (STM)
- Scanning Tunneling Spectroscopy (STS)
- Photo Current Mapping (PCM)
- Current-distance (I/d) Spectroscopy (with SICM)

Mechanical Properties

- Pinpoint™ Nanomechanical Mode
- Force Modulation Microscopy (FMM)
- Nanoindentation
- Nanolithography
- Nanolithography with High Voltage
- Nanomanipulation

Software

Park SmartScan™

- AFM system control and data acquisition software
- Auto mode for quick setup and easy imaging
- Manual mode for advanced use and finer scan control

XEI

- AFM data analysis software
- Stand-alone design—can install and analyze data away from AFM
- Capable of producing 3D renders of acquired data

Accessories

Temperature Controlled Stages
GloveBox *
Magnetic Field Generator
Liquid Options
AE

Dimensions in mm

Park NX12 with IOM

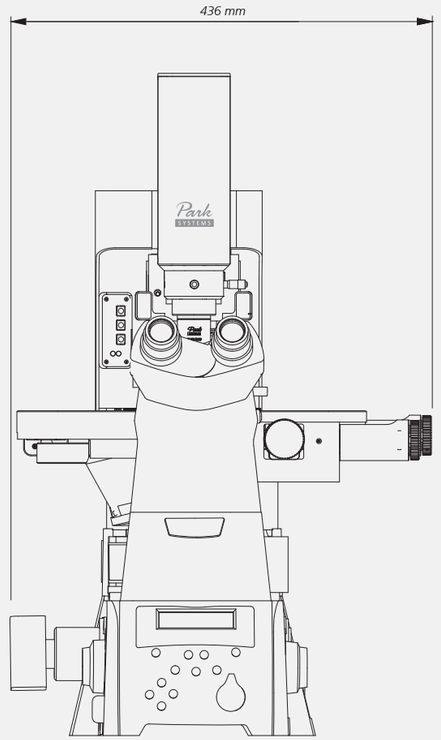

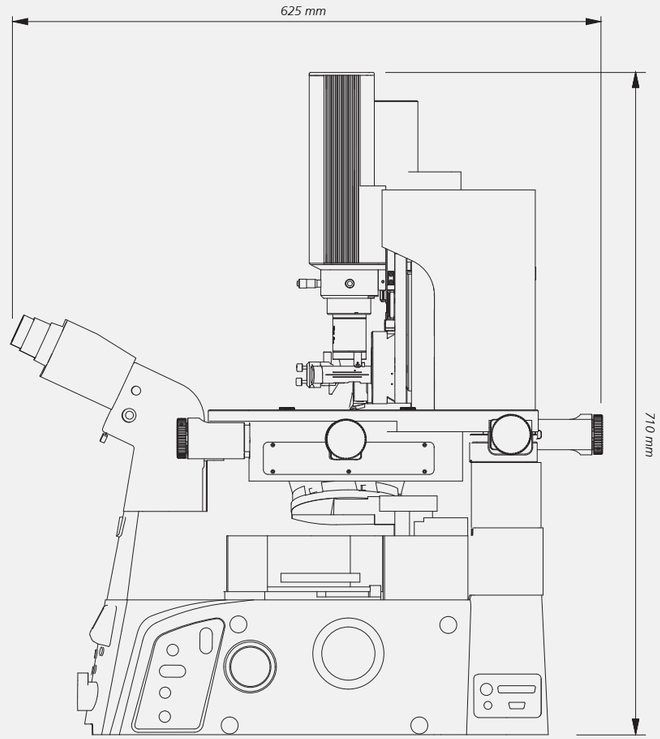

* **GloveBox** (Optional)

- Allows precise control over the humidity
- Makeup of specified gaseous environments
- Allowing you to insulate highly reactive materials